Advantage Line

AN bullet 4000 IR
960H Day/Night IR Bullet Camera

BOSCH

en User Manual

简体中文版 使用手册

Table of Contents

1 Cautions

2 Important safety instruction

3 Features

4 Components

5 Camera parts

6 Installation
6.1 Mounting position
6.2 Monitor connection
6.3 Camera adjustment

7 OSD menu structure

8 Specification
8.1 Dimensions

1 Cautions

This device complies with Part 15 of the FCC Rules. Operation is subject to the following two conditions;

1. This device may not cause harmful interference.
2. This device must accept any interference received, including interference that may cause undesired operation.

Note!
This equipment has been tested and found to comply with the limits for a Class A digital device, pursuant to part 15 of the FCC Rules. These limits are designed to provide reasonable protection against harmful interference when the equipment is operated in a commercial environment. This equipment generates, uses, and can radiate radio frequency energy and, if not installed and used in accordance with the instruction manual, may cause harmful interference to radio communications. Operation of this equipment in a residential area is likely to cause harmful interference in which case the user will be required to correct the interference at his own expense.”

WARNING
This is a class A product. In a domestic environment this product may cause radio interference in which case the user may be required to take adequate measures.

CAUTION!
Any changes or modifications in construction of this devies which are not expressly approved by the party responsible for compliance could void the user’s authority to operate the equipment.

CAUTION!
1. A regulated DC12V 500mA power supply is recommended for use with this camera for the best picture and the most stable operation. An unregulated power supply can cause damage to the camera. When unregulated power supply is applied, product warranty will be out of subject.
2. It is recommended that the camera is used with a monitor that has a CCTV quality 75 video impedance level. If your monitor is switched to high impedance then please adjust accordingly.
3. Do not attempt to disassemble the camera to gain access to the internal components. Refer servicing to your dealer.
4. Never face the camera towards the sun or any bright or reflective light, which may cause smear on the picture and possible damage to the CCD.
5. Do not remove the serial sticker for the warranty service.
6. Do not expose the camera to rain or other types of liquid.
7. The apparatus must be connected to a mains socket-outlet with a protective earthing connection.

Correct Disposal of This Product (Waste Electrical & Electronic Equipment)

(Applicable in the European Union and other European countries with separate collection systems)

This marking shown on the product or its literature, indicate that it should not be disposed with other household wastes at the end of its working life. To prevent possible harm to the environment or human health from uncontrolled waste disposal, please separate this from other types of wastes and recycle it responsibly to promote the sustainable reuse of material resources.
This product should not be mixed with other commercial wastes purchased this product, or their local government office, for details of where and how they can take item for environmentally safe recycling.
Business users should contact their supplier and check the terms and conditions of the purchase contract.
Household users should contact either the retailer where they for disposal.

CAUTION

RISK OF ELECTRIC SHOCK DO NOT OPEN

CAUTION: TO REDUCE THE RISK OF ELECTRIC SHOCK,
DO NOT REMOVE COVER(OR BACK). NO USER. SERVICING
TO QUALIFED SERVICE PERSONNEL.

This symbol is intended to alert the user to the presence of uninsulated “dangerous voltage” within the product’s enclosure that may be of sufficient mangnitude to constitute a risk of electric shock to persons.

This symbol is intended to alert the user to the presence of important operating and maintenance(servicing) instruction in the literature accompanying the appliance.

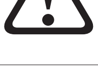

CAUTION!
These servicing instructions are for use by qualified service personnel only. To reduce the risk of electric shock do not perform any servicing other than that contained in the operating instructions unless you are qualified to do so.
Use Class 2 Power Supply Only

2 Important safety instructions

1. Read these instructions.
2. Keep these instructions.
3. Heed all warnings.
4. Follow all instructions.
5. Do not use this apparatus near water.
6. Clean only with dry cloth.
7. Do not block any ventilation openings. Install in accordance with the manufacturer’s instructions.
8. Do not install near any heat sources such as radiators, heat registers, stoves, or other apparatus (including amplifiers) that produce heat.
9. Do not defeat the safety purpose of the polarized or grounding-type plug. A polarized plug has two blades with one wider than the other. A grounding type plug has two blades and a third grounding prong. The wide blade or the third prong are provided for your safety. If the provided plug does not fit into your outlet, consult an electrician for replacement of the obsolete outlet.
10. Protect the power cord from being walked on or pinched particularly at plugs, convenience receptacles, and the point where they exit from the apparatus.
11. Only use attachments/accessories specified by the manufacturer.
12. Use only with the cart, stand, tripod, bracket, or table specified by the manufacturer, or sold with the apparatus. When a cart is used, use caution when moving the cart/apparatus combination to avoid injury from tip-over.

13. Unplug this apparatus during lightning storms or when unused for long periods of time.
14. Refer all servicing to qualified service personnel. Servicing is required when the apparatus has been damaged in any way, such as power-supply cord or plug is damaged, liquid has been spilled or objects have fallen into the apparatus, the apparatus has been exposed to rain or moisture, does not operate normally, or has been dropped.

3 Features

The camera has the following features:

- Ultra high resolution, 960H (1/3") Sensor.
- 5-50mm lens with True Day/Night filter for optimum performance in various lighting conditions.
- 720 TV Lines Horizontal Sensor Resolution.
- Integrated IR LED's for discrete surveillance in dark environments.
- Optimized IR beam pattern for a more even illumination throughout the camera's field of view.
- Multi language On Screen Display (OSD) with joystick control.
- True Wide Dynamic Range. (WDR)
- 3DNR
- 15 Privacy Zones.
- Motion Detection.
- External lens adjustment.
- Cable managed bracket for secure and clean installation.
- Vandal resistant (IK08)
- Outdoor rated (IP66)

4 Components

	Qty	Description
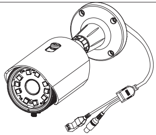	1	VTI-4085-V5x1(C) camera with integrated mounting bracket
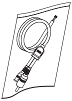	1	Video Output Test Cable
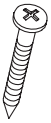	4	Screws (PH/1(SUS) 5x30)
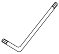	1	Wrench (M6 hex)
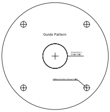	1	Guide Pattern
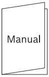	1	User Manual (this booklet)

5 Camera parts

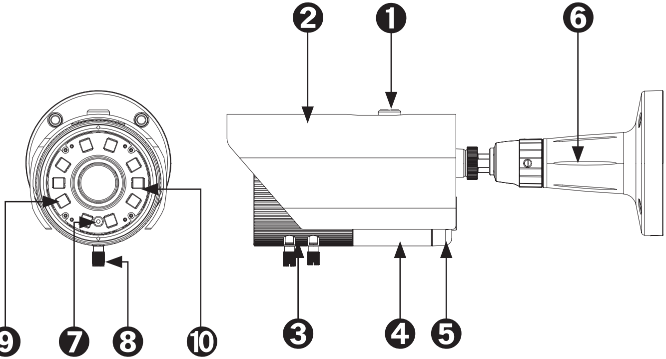

1 Sunshield Fixing Bolt
2 Sunshield
3 Housing Front
4 Housing Body
5 Housing Back
6 Mounting Bracket
7 Photo cell
8 Lens Knob
9 LED
10 Lens

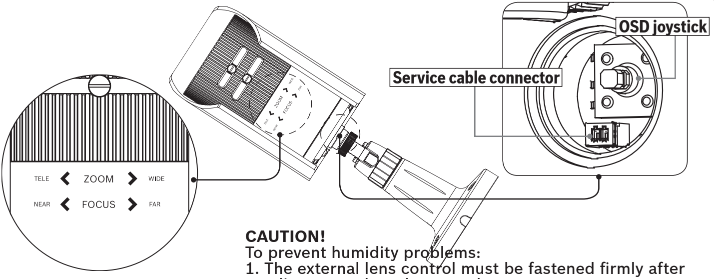

CAUTION!
To prevent humidity problems:
1. The external lens control must be fastened firmly after adjustments have been made.
2. The protection cap for OSD control and service cable connector must be firmly fastened after use.

6 Installation

6.1 Mounting position

To prevent injury, this apparatus must be securely attached to the floor/wall in accordance with the installation instructions.

NOTICE! The image sensors in modern cameras are highly sensitive and require special care for proper performance and extended lifetime. Follow the guidelines for optimum results with your camera:
– Do not expose to direct sunlight or bright spotlights in operating and nonoperating conditions.
– Avoid bright lights in the field of view of the camera. Bright lights cause a “smearing” effect, which is visible as white lines above and below the highlight. Prolonged exposure to bright lights may cause bleaching of the sensor's color filters. This will be visible as colored spots in the picture and is irreversible.

WARNING! The mounting surface, mounting screws/plugs, and junction box must be stable and capable of supporting a maximum load of 10kg (22 pounds). Mounting to an improper surface or using improper mounting material can cause camera malfunction and is a potential safety hazard.

WARNING! Make sure that appropriate mounting screws and anchors are used for the surface to which the camera is mounted. The supplied universal mounting screws can be used with most plastic anchors, please confirm compatibility before mounting the camera.

CAUTION! To prevent humidity problems, the camera must be installed in dry conditions, and the cable leads should be sealed after they are connected.

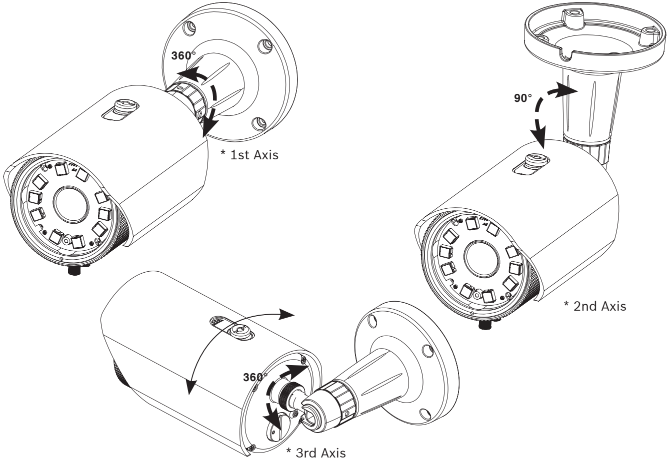

6 Installation

6.2 Monitor connection

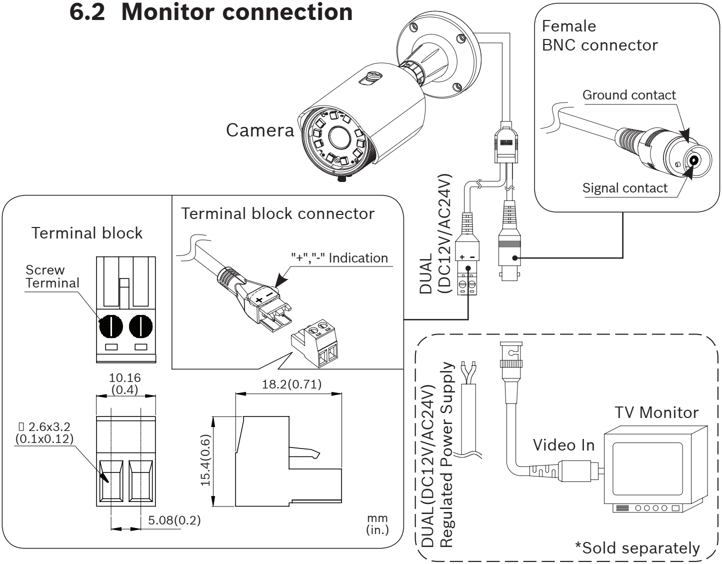

6.3 Camera adjustment

CAUTION! To prevent humidity problems, the camera must be installed in dry conditions. The lens knobs (located on the bottom of the camera) and protection cap (located on the rear of the camera) provide protection against water ingress when fully tightened. Therefore never remove or keep them loosened after installation. Doing so could cause water ingress and/or condensation on the inside of the camera window.

1. Open the protection cap on the rear of the camera
   (only needed to access service monitor connection and OSD control)
2. Connect service monitor (optional)
3. Loosen the zoom and focus knob
4. Adjust zoom and focus
5. Fasten the zoom and focus knob tightly
6. Adjust OSD settings (refer to OSD section)
7. Disconnect service monitor cable (optional)
8. Check rubber seal is in place on the protection cap. Close and firmly tighten the protection cap on the rear of the camera.

7 OSD menu structure

MAIN MENU	1st Sub	2nd Sub	3rd Sub	4th Sub
EXPOSURE	AUTO	HIGH LUMINANCE	FLICKERLESS	OFF,ON
			BRIGHTNESS	000 ~ 255
		LOW LUMINANCE	MODE	OFF, AGC, SLOW, AGC->SLOW, AGC->SLOW->AGC
			AGC MAX	6, 12, 18, 24, 30, 36
			DSS MAX	2, 48, 16, 32, 64, 128, 256
			BRIGHTNESS	x0.25, x0.50, x0.75, x1.00
		RETURN		
	MANUAL	MODE	SHUTTER, SLOW	
		SHUTTER	1/50(PAL), 1/120(PAL) 1/60(NTSC), 1/100(NTSC) 1/250,1/500, 1/1000,1/2000 1/4000,1/10000, 1/100000	
		AGC	6, 12, 18, 24, 30, 36, 42, 44. 8	
		RETURN		

MAIN MENU	1st Sub	2nd Sub	3rd Sub	4th Sub
WHITE BAL	ATW	SPEED	000 ~ 255	
		DELAY CNT	000 ~ 255	
		ATW FRAME	x0.50, x1.00, x1.50, x2.00	
		ENVIRONMENT	INDOOR, OUTDOOR	
		RETURN		
	PUSH			
	USER1	B-GAIN	000 ~ 255	
		R-GAIN	000 ~ 255	
		RETURN		
	USER2	B-GAIN	000 ~ 255	
		R-GAIN	000 ~ 255	
		RETURN		
	MANUAL	LEVEL	000 ~ 128	
		RETURN		
	PUSH LOCK			

7 OSD menu structure

MAIN MENU	1st Sub	2nd Sub	3rd Sub	4th Sub
DAY&NIGHT	AUTO	DELAY CNT	000 ~ 015	
		DAY -> NIGHT	000 ~ 014	
		NIGHT -> DAY	000 ~ 015	
		BURST	ON, OFF	
		IR OPTIMIZER	ON, OFF	
		RETURN	ON, OFF, AUTO	
	BW	BURST	ON, OFF	
		IR OPTIMIZER	ON, OFF	
		IR LED MODE		
		RETURN		
	COLOR			

WDR/BLC	WDR MODE	ON	LEVEL	000 ~ 015
			CONTRAST1	000 ~ 007
			CONTRAST2	000 ~ 004
		OFF		
	BLC MODE	ON	BLC ZONE	TOP, LEFT, RIGHT, BOTTOM, CENTER
			LEVEL	000 ~ 015
		OFF		
	HLC MODE	ON. AUTO	CLIP LEVEL	000 ~ 255
			SCALE	000 ~ 015
		OFF		

DNR	2DNR MODE	ON, OFF		
	2DNR LEVEL	000 ~ 015		
	3DNR MODE	ON, OFF		
	3DNR LEVEL	000 ~ 063		
	RETURN			

IMAGE	FLIP	OFF, V-FLIP H-FLIP, HV-FLIP		
	FREEZE	ON, OFF		
	EZOOM	1x ~ 3x		
	CONTRAST	000 ~ 063		
	SHARPNESS	000 ~ 015		
	RETURN			

7 OSD menu structure

MAIN MENU	1st Sub	2nd Sub	3rd Sub	4th Sub
SPECIAL	CAMERA TITLE	ON	EDIT MODE	
			RETURN	
		OFF		
	LANGUAGE	ENGLISH 中文 Русский ESPAÑOL DEUTSCH FRANCAISE PORTUGUÊS 日本語		
	PRIVACY	AREA SEL	1 ~ 15	
		MODE	ON, OFF	
		POSITION	POSITION EDIT	
		COLOR	WHITE, BLACK, RED, GREEN, BLUE, YELLOW, CYAN, MAGENTA	
		TRANSPARENCY	0.00, 0.05, 0.75, 1.00	
		MOSAIC	ON, OFF	
		RETURN		
	MOTION DETECT	ON	DETECT SENSE	000 ~ 127
			BLOCK DISP	ON, OFF
			MONITOR AREA	AREA SEL: 1 ~ 4
				MODE: ON. OFF
				TOP: 000 ~ 015
				BOTTOM: 000 ~ 015
				LEFT: 000 ~ 023
				RIGHT: 000 ~ 023
				RETURN
			RETURN	
		OFF		
	RETURN			
FACTORY DEFAULT				
EXIT				
SAVE & EXIT				

*** Important Note:**

- Any changes made to the camera settings must be saved prior to exiting the OSD menu. Otherwise all changes will be discarded.

8 Specification

Model	VTI-4085-V521(NTSC)	VTI-4085-V511(PAL)
Image Device	Ultra high resolution, 960H (1/3") Sensor	
Scanning System	2 : 1 Interlace	
Scanning Frequency	15.734 KHz(H),59.94 Hz(V)	15.625 KHz(H), 50 Hz(V)
H. Sensor Res.	720TVL	
Actual H. Res.	620TVL	
Total Pixels	1028(H) x 508(V)	1028(H) x 596(V)
Effective Pixels	976(H) x 494(V)	976(H) x 582(V)
S/N Ratio	More than 50dB (AGC Off, 3DNR on)	
Min. Illumination	0 Lux (IR LED On)	
Sync. System	Internal	
Gamma	r = 0.45	
Video Output	1.0 Vp-p Composite (75Ω)	
Lens	Varifocal Auto IRIS & DN Lens Built-in	
Lens focal length	5-50mm	
Aperture	F1.4~360	
Lens adjustment	External	
Electronic Shutter	1/60 sec	1/50 sec
WDR	Yes	
BLC	OFF / BLC / HLC / WDR	
White Balance	ATW / PUSH / USER1 / USER2 / MANUAL / PUSH-LOCK	
2DNR / 3DNR	On / Off (Level Adjustable)	
Function	MIRROR / FREEZE / FLIP / CONTRAST / SHARPNESS / DSS	
Motion Detection	Zone 4ea	
Privacy Masking	Zone 15ea	
Language	English, Simplified Chinese, German, French, Russian, Portuguese, Spanish, Japanese	
Day & Night	True Day & Night with ICR Mechanism	
OSD	Built-in	
OSD Control	External	
IR LED [m(ft)]	850 nm, max 100m (330ft)	
IR Angle H/V	39/24 degrees	
IP Rating	IP66 (Water resistant)	
Operating Temperature	-30 ºC to +50 ºC (-22 ºF to +122 ºF)	
Storage Temperature	-20˚C to +60˚C (-4˚F to +140˚F)	
Power Consumption	Dual : DC12V(±10%), Max. 730 mA / AC24V(±10%), Max. 9.1 W	
Cable Management Bracket	Yes	
Video interface	1 standard BNC connector for analog output	
Weight	Approx. 1.9kg(including bracket)	
Housing material	Casted/machined Aluminium	
Paint color	Camera / bracket: Black RAL9017 Sunshield: Silver grey RAL9006	
Vandal resistant	Yes (IK08)	
Outdoor rated	Yes (IP66)	

8-1 Dimensions

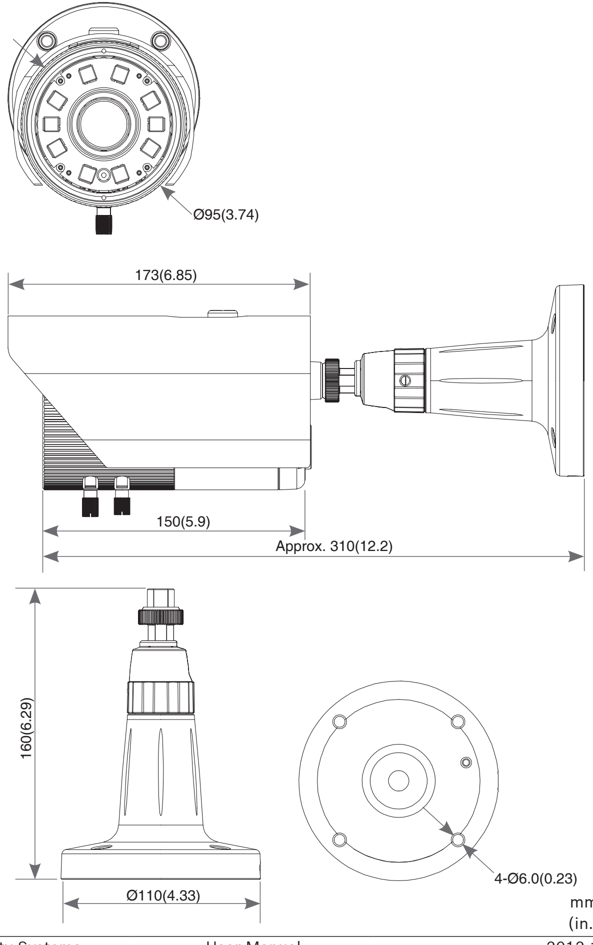

目录

1 注意事项

2 重要安全指示

3 特性

4 组件

5 摄像机零件

6 安装

6.1 装配位置

6.2 连接监视器

6.3 摄像机调整

7 屏幕显示选单结构

8 规格

8.1 尺寸

1 注意事项

此装置符合FCC条例第15部分的规定。
操作需符合以下两种条件;

1. 此装置不会引起有害的干扰。
2. 此装置必须能够承受任何收到的干扰，包括可能引起意外操作的干扰。

注记!

根据FCC条例第15部分之规定，此装备经证实符合A类数字装置的限制规定。这些限制的目的是为了在商业环境中操作本装备时，可提供适当防护，以防止有害的干扰。本装备会产生、使用且能发射射频能量，若未依据操作指南安装时，可能会对无线电通信产生有害干扰。在住宅区操作本装备时可能造成有害干扰，此时，用户需自费矫正此干扰。

警告

此为A类产品。在家用环境下，此产品可能引发无线电干扰，在此情况下，用户需采取适当措施。

注意!

装备的结构未经负责合规性的相关方明确许可的变更或修改，都可能致使用户失去操作本装备的权利。

注意!

1. 为了获得最佳图像且保持稳定操作，此摄像机建议采用稳压的12V 500mA直流电源。
   非稳压的供应电源可能造成摄像机受损。
   采用非稳压电源供应时，产品将不在保固范围内。
2. 建议应将此摄像机，与拥有CCTV品质75视频阻抗等级的监视器一起使用。
   当监视器切换为高阻抗时，请相应调整。
3. 请勿尝试拆解摄像机以接近内部组件。保修请洽询您的经销商。
4. 请勿将摄像机直接朝向日光或任何强光或反射光线，以免图像模糊且可能致使CCD(电荷耦合组件)受损。
5. 请勿拆除保固服务的序号标签。
6. 请勿让摄像机曝露在雨水或其它类型的液体中。
7. 此装置必需连接到具有保护接地的主电源插座。

正确弃置本产品
(废弃电器与电子设备)

(适用于欧盟及其它拥有分类回收制度的欧洲国家)

产品或其文件上显示此记号时，表示当其使用寿命结束时，不应以其它家庭废弃物方式处理。
为避免由于未受控制的废弃物处理方式，对环境或人类健康产生可能的伤害，请与其它类型废弃物分开并回收，让材料资源可持续再利用。
本产品不可与其它商业垃圾混合，有关环保回收项目的地点与方法的详细信息，请向购买处所或您当地的政府办事处洽询。
企业用户应与其供货商联系，并确认其购买合同条款与条件。
家庭用户应向零售商洽询其处置方式。

注 意

触电危险请勿开启

注意：为了降低触电风险，用户请勿拆除外盖(或背盖)。请交由合格的服务人员进行保修。

为了降低触电风险，用户请勿拆除外盖(或背盖)。请交由合格的服务人员进行保修。

此符号是在提醒使用者，随附于装置的文件中，有重要的操作与保养(服务)指南。

注意!
这些保修指南，仅供合格的服务人员使用。为了降低触电风险，除非您具备资格，否则请勿执行任何操作指南所述以外的保修。
仅能采用等级2的电源供应

2 重要安全指示

1. 详读这些指示。
2. 保存这些指示。
3. 注意所有警告事项。
4. 遵照所有指示。
5. 切勿在靠近水的地方使用本装置。
6. 只能以干布进行清洁。
7. 请勿妨碍所有通风口。依据制造商指南进行安装。
8. 请勿安装在像是散热器、通风温度调节设备、火炉或其它会产生热量设备(含放大器)的任何热源附近。
9. 请勿破坏有安全作用的极化或接地型插头。极化插头有两个金属片，其中一片比另一片为宽。接地型插头则有两个插片和第三支用来接地的插脚。宽的金属片或第三支插脚，都是为了您的安全。若所提供的插头不适用于您的插座时，请洽询合格电工更换老式插座。
10. 保护电源线免被踩踏或挤压，特别是靠近插头、便捷插座及离开该装置的地方。
11. 仅能采用制造商所指定的附件或配件。
12. 仅能采用制造商所指定或随设备出售的推车、支架、三脚架、托架或桌子。使用推车时，移动推车/设备的组合时要特别小心，以免翻倒受伤。

13. 闪电暴风雨或是长期未使用，请将装置插头拔除。
14. 所有保修应交由合格的服务人员来进行。当设备已因任何方式损坏时，都需要维修(如电源线或插头损坏、 液体溅入或有异物掉入设备中、设备曾曝露于雨中或潮湿环境中、操作不正常或曾被摔落等)。

3 特性

此摄像机有以下特性

- 超高分辨率，960H(1/3”)感应器。
- 拥有真实日/夜滤镜，可提供各种照明条件下最佳性能的5-50 mm镜头。
- 720电视线的水平感应器分辨率。
- 整合的红外 LED，以供黑暗环境下间断监测。
- 优化的红外光束样式，让整个相机视野照明更为均匀。
- 附摇杆控制的多国语言屏幕显示(OSD)。
- 真正的宽动态范围(WDR)。
- 3DNR。
- 15个隐私区域。
- 动域检测。
- 外部镜头调整。
- 电缆管理托架，以利安全与整齐的装设。
- 防破坏。(IK08)
- 室外级。(IP66)

4 组件

	数量	说明
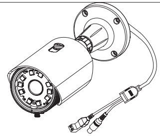	1	VTI-4085-V5x1(C) 含整合式装配托架的摄像机
	1	视频输出 测试缆线
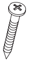	4	螺丝 (PH/1(SUS) 5x30)
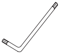	1	扳手 (M6六角)
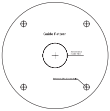	1	导引样式板
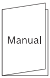	1	使用手册 (本手册)

5　摄像机零件

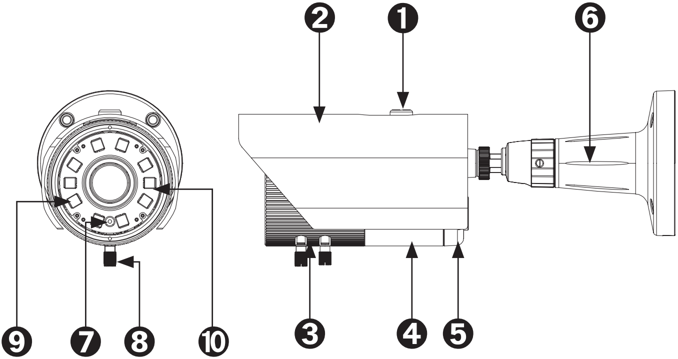

1　遮阳罩固定螺栓
2　遮阳罩
3　外罩前端
4　外罩本体
5　外罩背面
6　装配托架
7　光敏电阻
8　镜头旋钮
9　LED
10　镜头

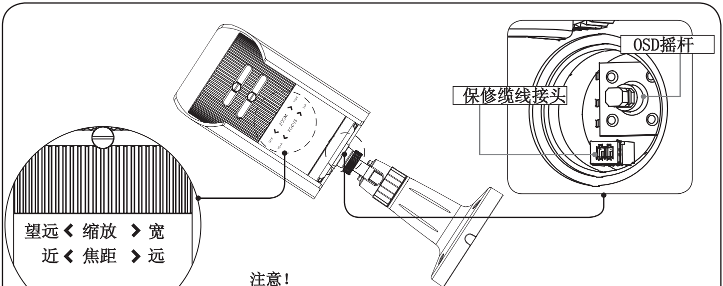

注意！
为避免湿气问题：
1. 在完成调整后，应将外部镜头控制紧密锁紧。
2. 使用后应将OSD控制与保修缆线接头的护盖紧密锁紧。

6 安装

6.1 装配位置

为避免伤害，请依据安装指南，将装置紧密固定在地板/墙壁上。

注记! 这个新型摄像机里的图像感应器十分敏感，为确保其性能并延长寿命，必需特别注意。请遵照指南，让您的摄像机获到最佳效果：
- 不论操作或非操作状态下，都不要将它曝露在日光或聚光灯直射处。
- 避免摄像机视野中有强光。强光将造成“拖影”，会在强光上方与下方形成白色线。长期暴露在明亮的光线中，可能导致感应器彩色滤光片白化的情形。这样会在图片中形成彩色斑点，且无法消除。

警告! 装配面、装配螺丝/插头及接线盒等均需稳固，且最高能支撑10 公斤(22 磅)的负荷。装配在不适当的表面，或使用不当的装配材料时，可能造成摄像机故障，且也潜在安全危险。

注意! 确认装设摄像机表面采用适当的装配螺丝与碰撞管。随附的通用安装螺丝可供大多数塑料膨胀管使用，请在安装摄像机前确认其兼容性。

警告! 为避免潮湿问题，必需将摄像机安装在干燥环境下，且当完成连接后，应将电缆导线密封。

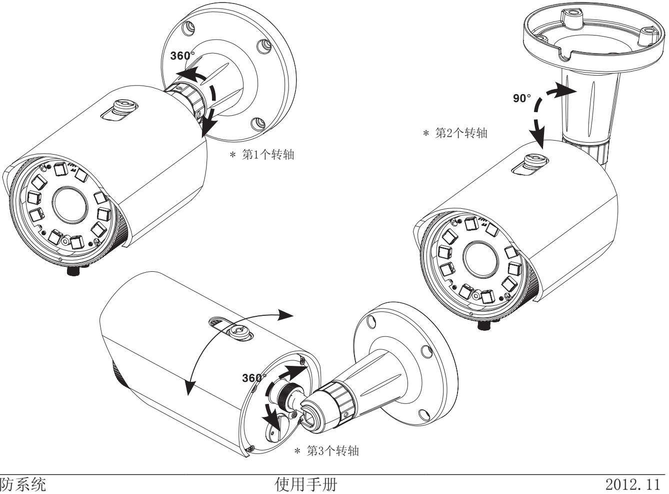

6 安装

6.2 连接监视器

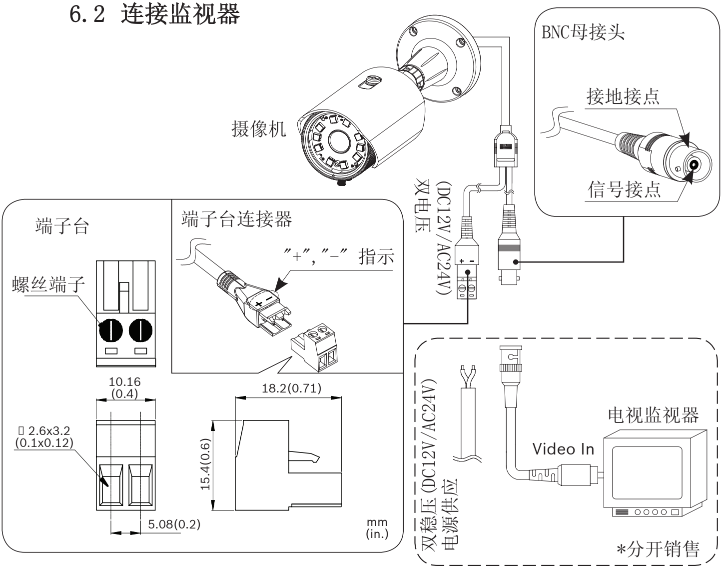

6.3 摄像机调整

注意！ 为避免潮湿问题，必需将摄像机安装在干燥环境下。当镜头旋钮(位于摄像机底端)与保护盖完全上紧时，可提供进水防护。因此，在完成安装后，绝不可将它拆除或未上紧。否则可能导致摄像机窗口内部产生凝水或进水等情形。

1. 开启位在摄像机背面的保护盖
   (当欲接近保修屏幕连接与屏幕显示控制时，才有需要)。
2. 连接保修监视器(选购)。
3. 放松缩放与对焦旋钮。
4. 调整缩放与对焦。
5. 紧密锁紧缩放与对焦旋钮。
6. 调整屏幕显示设定(请参照屏幕显示乙节)。
7. 卸除保修屏幕缆线(选购)。
8. 检查橡胶密封垫是否在保护盖上定位。将保护盖紧密锁紧在摄像机背面。

7 屏幕显示选单结构

主选单	第1层子选单	第2层子选单	第3层子选单	第4层子选单
曝光	自动	高辉度	无闪烁	关、开
			明亮	000 ~ 255
		低辉度	模式	关、自动增益控制、缓慢、自动增益控制->缓慢、自动增益控制->缓慢->自动增益控制
			自动增益控制最高	6, 12, 18, 24, 30, 36
			DSS最高	2, 48, 16, 32, 64, 128, 256
			明亮	x0.25, x0.50, x0.75, x1.00
		返回		
	手动	模式	快门，缓慢	
		快门	1/50(PAL), 1/120(PAL) 1/60(NTSC), 1/100(NTSC) 1/250,1/500, 1/1000,1/2000 1/4000,1/10000, 1/100000	
		自动增益控制	6, 12, 18, 24, 30, 36, 42, 44.8	
		返回		

主选单	第1层子选单	第2层子选单	第3层子选单	第4层子选单
白平衡	自动跟踪白平衡	速度	000 ~ 255	
		延迟控制	000 ~ 255	
		自动跟踪白平衡框	x0.50, x1.00, x1.50, x2.00	
		环境设置	INDOOR, OUTDOOR	
		返回		
	推进			
	用户1	B增益	000 ~ 255	
		R增益	000 ~ 255	
		返回		
	用户2	B增益	000 ~ 255	
		R增益	000 ~ 255	
		返回		
	手动	等级	000 ~ 128	
		返回		
	推进锁定			

7 屏幕显示选单结构

主选单	第1层子选单	第2层子选单	第3层子选单	第4层子选单
日/夜模式	自动	延迟控制	000 ～ 015	
		日->夜	000 ～ 014	
		夜->日	000 ～ 015	
		脉冲	开，关	
		红外自动补偿	开，关	
		返回	开，关，自动	
	黑白	脉冲	开，关	
		红外自动补偿	开，关	
		红外 LED模式		
		返回		
	彩色			
WDR/ 逆光补偿	WDR模式	开	等级	000 ～ 015
			对比1	000 ～ 007
			对比2	000 ～ 004
		关		
	逆光补偿模式	开	逆光补偿区	上，左，右，下，中
			等级	000 ～ 015
		关		
	高亮度补偿模式	开，自动	CLIP等级	000 ～ 255
			比例	000 ～ 015
		关		
DNR	2DNR模式	开，关		
	2DNR等级	000 ～ 015		
	3DNR模式	开，关		
	3DNR等级	000 ～ 063		
	返回			
图像	翻转	关，水平翻转，垂直翻转，水平垂直翻转		
	冻结	开，关		
	E缩放	1x ～ 3x		
	对比	000 ～ 063		
	锐度	000 ～ 015		
	返回			

7 屏幕显示选单结构

<table>
<tr><td>主选单</td><td>第1层子选单</td><td>第2层子选单</td><td>第3层子选单</td><td>第4层子选单</td></tr>
<tr><td rowspan="23">特殊</td><td rowspan="3">摄像机标题</td><td rowspan="2">开</td><td>编辑模式</td><td></td></tr>
<tr><td>返回</td><td></td></tr>
<tr><td>关</td><td></td><td></td></tr>
<tr><td>语言</td><td>英语
中文
俄语
西班牙语
德语
法语
葡萄牙语
日本语</td><td></td><td></td></tr>
<tr><td rowspan="7">隐私区域屏蔽</td><td>区域选择</td><td>1 ~ 15</td><td></td></tr>
<tr><td>模式</td><td>开，关</td><td></td></tr>
<tr><td>位置</td><td>位置编辑</td><td></td></tr>
<tr><td>颜色</td><td>白、黑、红、绿、
蓝、黄、青绿、紫红</td><td></td></tr>
<tr><td>透明度</td><td>0.00, 0.05,
0.75, 1.00</td><td></td></tr>
<tr><td>马赛克</td><td>开，关</td><td></td></tr>
<tr><td>返回</td><td></td><td></td></tr>
<tr><td rowspan="11">动域检测</td><td rowspan="10">开</td><td>检测灵敏度</td><td>000 ~ 127</td></tr>
<tr><td>块状显示</td><td>开，关</td></tr>
<tr><td rowspan="7">监视区域</td><td>区域选择：1 ~ 4</td></tr>
<tr><td>模式：开，关</td></tr>
<tr><td>上：000 ~ 015</td></tr>
<tr><td>下：000 ~ 015</td></tr>
<tr><td>左：000 ~ 023</td></tr>
<tr><td>右：000 ~ 023</td></tr>
<tr><td>返回</td></tr>
<tr><td>RETURN</td><td></td></tr>
<tr><td>关</td><td></td><td></td></tr>
<tr><td>返回</td><td></td><td></td><td></td></tr>
<tr><td>工厂预设</td><td></td><td></td><td></td><td></td></tr>
<tr><td>退出</td><td></td><td></td><td></td><td></td></tr>
<tr><td>储存并退出</td><td></td><td></td><td></td><td></td></tr>
</table>

* **重要注记：**

- 退出屏幕显示选单前，需先储存所有在摄像机设定上所做的变更。
  否则所有变更都会无效。

8 规格

型式	VTI-4085-V521(NTSC)	VTI-4085-V511(PAL)
图像装置	超高分辨率，960H (1/3″)感应器	
扫描系统	2 : 1交错	
扫描频率	15.734 KHz(H), 59.94 Hz(V)	15.625 KHz(H), 50 Hz(V)
感应器水平分辨率	720TVL	
实际水平分辨率	620TVL	
总像素	1028(水平) x 508(垂直)	1028(水平) x 596(垂直)
有效像素	976(水平) x 494(垂直)	976(水平) x 582(垂直)
信噪(S/N)比	大于50dB(自动增益关闭、3DNR开启下)	
最低照度	0 Lux(红外LED开启)	
同步系统	内部	
伽玛值	r = 0.45	
视频输出	1.0 Vp-p 合成(75Ω)	
镜头	变焦自动光圈与内建式DN镜头	
镜头焦距	5-50 mm	
光圈	F1.4~360	
镜头调整	内部	
电子快门	1/60秒	1/50秒
WDR	是	
逆光补偿	关闭/逆光补偿/高亮度补偿/WDR	
白平衡	自动跟踪白平衡/推进/用户1/用户2/手动/推进锁定	
2DNR / 3 DNR	开/关(等级可调整)	
功能	镜像/冻结/翻转/对比度/锐度/DSS	
动域检测	4个区域	
隐私区域屏蔽	15个区域	
语言	英语、简中、德语、法语、俄语、葡萄牙语、西班牙语、日本语(假设我们增加中文时，程序启动时间将因加载字型至内存，约增加5秒钟)	
日/夜	真实日/夜转换，ICR	
屏幕显示	内建	
屏幕显示控制	外部	
红外LED照射距离[m(ft)]	850 nm，照射距离最高至100m (330ft)	
红外LED照射角度H/V	39/24度	
IP防护等级	IP66(防水)	
操作温度	-30℃至+50℃(-22℉至+122℉)	
储存温度	-20℃至+60℃(-4℉至+140℉)	
电力消耗	双重：直流12V(±10%)，最高730mA / 交流24V(±10%)，最高9.1 W	
缆线管理托架	支持	
视频接口	1个供模拟输出使用的标准BNC接头	
重量	约1.9 kg(含托架)	
外壳材料	铸造/机械加工铝质	
油漆颜色	摄像机/托架：黑色RAL9017 遮阳罩：银灰色RAL9006	
防破坏	是(IK08)	
室外等级	是(IP66)	

8-1 尺寸

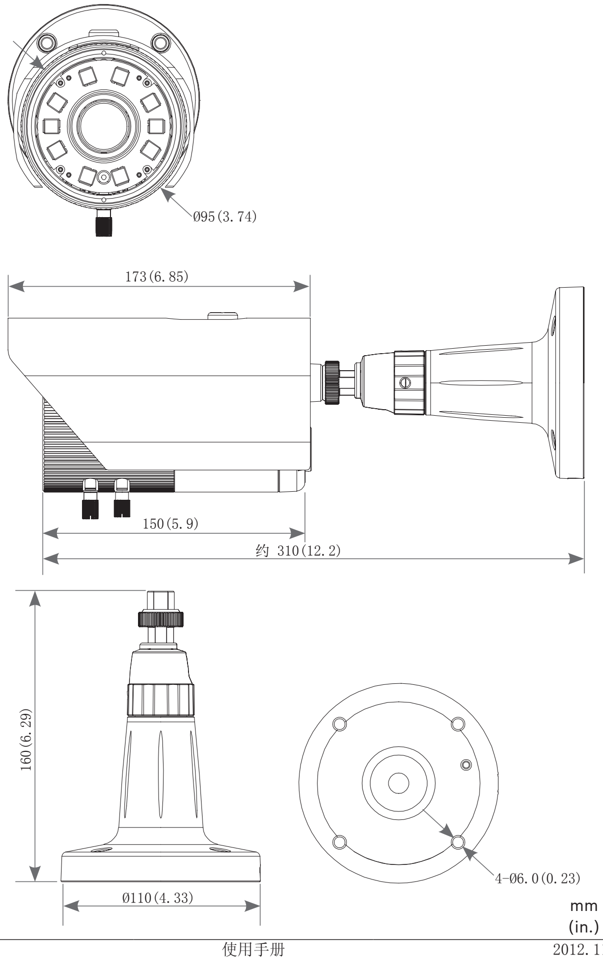

Bosch Security Systems

www.boschsecurity.com
(c) Bosch Security Systems, 2013